RTA

Welded cabinet with demountable side panels
and back panel, IP 20, loading capacity 1200/1500 kg

Product Options

Door Options

Hardened smoked glass door

Perforated door

Solid steel door

Special door

Gluing methods

We use a CNC system for polyurethane compound applications. This system has a three axis motion and the mixture is applied evenly by nozzle. This new professional method of gluing increases the bond strength between the glass and steel frame.

Perforated door

Perforeted door we produce with standard air permeability 80 %, on demand with 86%.

Special doors allow for mounting standard horizontal fan units (for most of the free-standing cabinets).

Further information is available in the section Active cooling.

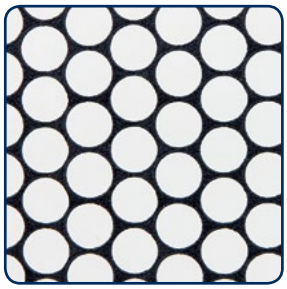

air permeability 80 %

air permeability 86 %

Double Wing Door

Hardened smoked glass door

Perforated door

Solid steel door

Colour Variety of the Cabinets

Standard colours are RAL 7035 (light grey) and RAL 9005 (black). However, it is possible to use any colour from the RAL sampler on various cabinet parts and thus to create an original design according to a client's or architect's concept. The paint has a good resistance to chemical and mechanical damage. We highly recommend to clean the surface by standard non-abrasive washing detergents with neutral pH (5-8) and then to dry it well.

Securing of the side panels

lock, standard key

safety countersunk screws

Safety countersunk screws are standardly for RTA, RDA cabinets in version A3, A7. On request, the screws may be mounted from the inner side of the cabinet.

Enlarged skeleton rails
Allow installation of accessories - PDU, cable and patch cord management etc.

Sliding rail fixed at four points
Cold-rolled steel 2,5 mm.

Triton handle
Just by replacing the plastic inlet (is not part of supply) you can choose classic or half-cylindric lock.
Patent: PUV 2013-27443

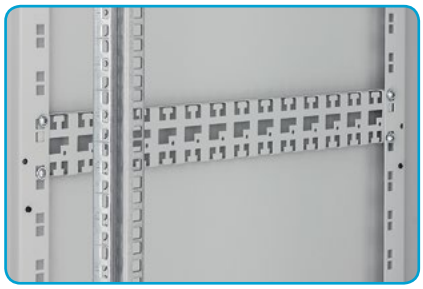

RAC-VP-D5x-X1
Accessory - horizontal cable management (optional accessory).

Power distribution units installed in skeleton
(optional accessory)

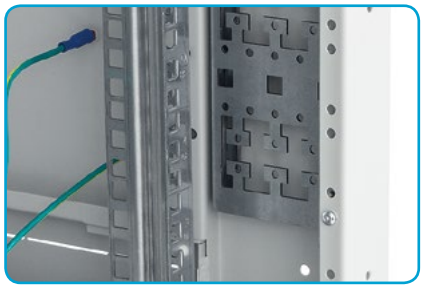

RAX-VP-Vxx-X2
Accessory - vertical cable menagement in skeleton (optional accessory).

RAC-IP-X01-X1
Rails for the increased IP30 protection (optional accessory).

Cabinet is presented including the optional accessories – cable management system.

Perforated skeleton rails
Square perforation for the captive nuts alongside whole height of the rail in the unit span allows additional accesory installation.

Laser unit marking
19" vertical rails (zinc-coated 2 mm cold-rolled steel) are laser marked at every installation unit.

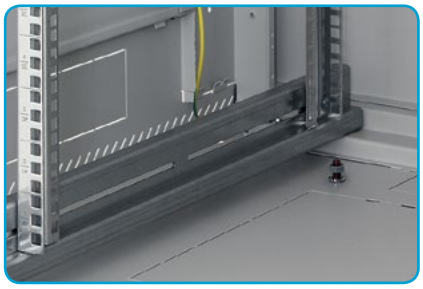

Main earthing point M8

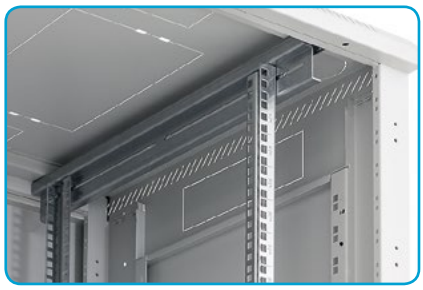

Strengthened skeleton
Cold-rolled steel 1,3 mm.

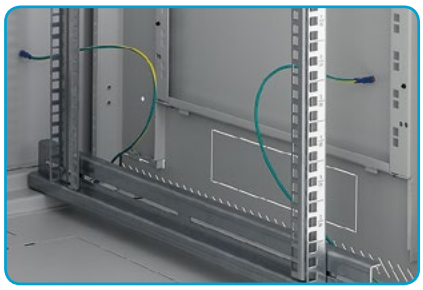

Bonding
All deteachable parts are bonded in accordance to appropriate standard.

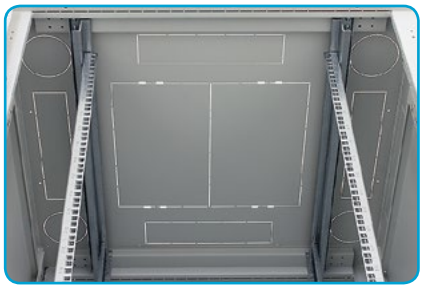

Break-out cable entries
Large amout to cable entries allows comfortable installation cable also as patch-rocd guiding.

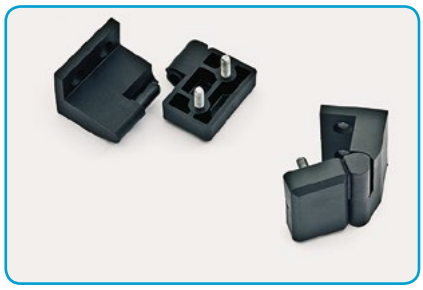

Hook-on hinges
Standard hinges can be replaced by comfortable to use hook-on version.

Fringe edge
Supply includes 1 m.

Flex frame
Cabinets with 800 mm width have system, which allows installation of sliding rails in a span of 19",21" and 23".

RTA – width 600 mm 37-47 units, width 800 mm 15-47 units.

Installation holes in skeleton rails
The openings in the entire height of the skeleton correspond to the unit spacing of the installation vertical rails.

Marking of units
Installation units are marked by laser on the vertical rails for convenience.

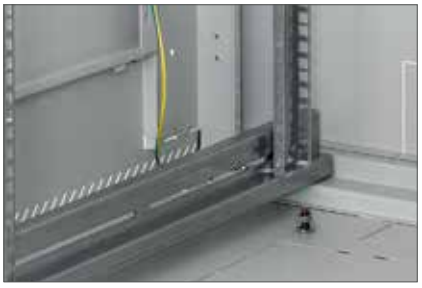

Main earthing point M8
An M8 screw is located in the cabinet for entire installation earthing.

Triton handle
Just by replacing the plastic inlet (is not part of supply) you can choose classic or half-cylindrical lock.
Patent: PUV 2013-27443.

Hook-on hinges
Standard door hinges is possible to replace by hook-on version **(optional accessory)**.

Fringe edge
Protects cables from damage. 1m in supply.

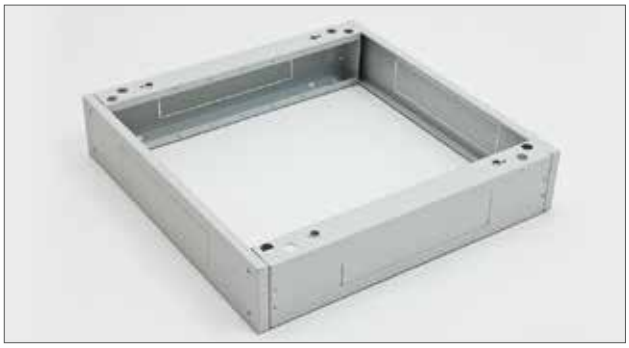

Type	Dimensions (mm)	Maximum recommended load (kg)
RAx-PO-X66-XD	600 x 600	1900
RAx-PO-X68-XD	600 x 800	1900
RAx-PO-X69-XD	600 x 900	1900
RAx-PO-X61-XD	600 x 1000	1900
RAx-PO-X60-XD	600 x 1100	1900
RAx-PO-X62-XD	600 x 1200	1900
RAx-PO-X86-XD	800 x 600	1900
RAx-PO-X88-XD	800 x 800	1900
RAx-PO-X89-XD	800 x 900	1900
RAx-PO-X81-XD	800 x 1000	1900
RAx-PO-X80-XD	800 x 1100	1900
RAx-PO-X82-XD	800 x 1200	1900

RAB-PO-Xxx-XD, RAC-PO-Xxx-XD

The base is fully universal, which means that it is usable for all types of free-standing cabinets except RSX.
The construction of the base is formed of two side profiles which correspond to the depth of the cabinet, and two cover panels (front and back) with a corresponding width.
Bases XD series have a load capacity 1900 kg.

Supply includes

- 2x side base profile with a cable entry (with breakout-type blanking panels)
- 2x cover with cable openings (with breakout-type blanking panels)
- 1x cover with a filter
- 1x anti-dust brush
- 4x Screw M10 x 30
- 4x Washer 10,5
- 8x Screw M5 x 30

The bases are delivered dismantled. The second dust filter for the second cover replacing can be easily ordered later. The base always exactly copies the ground plan of the cabinet regardless of installation of filter. The bases are standardly supplied in widths of 600 and 800 mm and depths from 600 to 1200 mm. All the bases are 120 mm high.

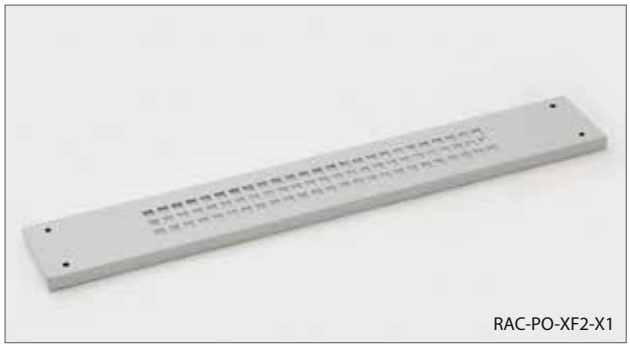

RAC-PO-XF2-X1

Type	Dimensions – w * h (mm)
RAx-PO-XF1-X1	600 x 120
RAx-PO-XF2-X1	800 x 120

RAB-PO-XFx-X1, RAC-PO-XFx-X1

Filter for bases.

Supply

Screw M5 x 30 ..... 4x

RAB-SS-X01-X1, RAC-SS-X01-X1

Stabilizers for free-standing cabinets.

Supply

Screw M5 x 12 ..... 4x

Cabinet depth (mm)	Cabinet width (mm)	
	600	800
600	RAX-VP-X77-X1	RAX-VP-X83-X1
800	RAX-VP-X78-X1	RAX-VP-X84-X1
900	RAX-VP-X79-X1	RAX-VP-X85-X1
1000	RAX-VP-X80-X1	RAX-VP-X86-X1
1100	RAX-VP-X81-X1	RAX-VP-X87-X1
1200	RAX-VP-X82-X1	RAX-VP-X88-X1

RAX-VP-Xxx-X1

Installation cable management bar for RMA, RZA, RTA, RYA, RDA.

For the correct use of the optional Accessories the following instructions are important:

- install the cabinet on a level and sufficiently firm floor
- place at least 65% of the load in the the lower half of the height of the cabinet
- ensure that the load is evenly distributed between the front and rear vertical rails
- when taxiing with a cabinet, comply with the relevant standards.

Calculation of the load capacity of one wheel:

**Total weight of the cabinet (i.e. own weight + installed accessories) / 3 = load capacity of one castor.*

The load capacities of the castors are applicable for travel speed up to 4 km/h on level ground and smooth surface at ambient temperature in the range of 10-30 °C.

All dimensions, load capacities and tolerances correspond to following standards: EN 12527-12533, DIN 7845.

RAX-MS-X47-X1

Direct mounting castors set with max. recommended load capacity*:
- **500 kg** for type **RTA, RYA, RDA, RDE** 600 mm wide,
- **600 kg** for type **RTA, RYA, RDA, RDE** 800 mm wide.

The height of the cabinet is increased by 155 mm.

Set

Castors with a brake 2x
Castors without a brake 2x
Screw M5 x 20 Thorx 16x
Flat washer 5,3 ..... 16x

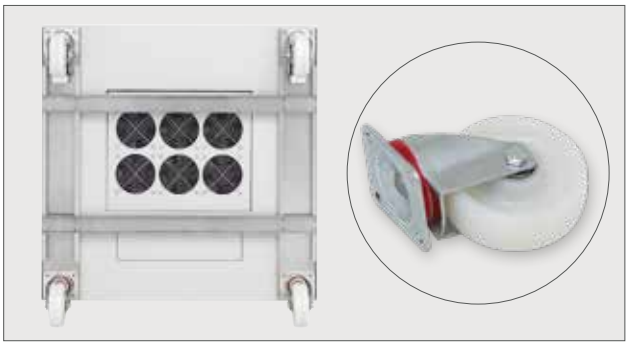

Cabinet depth (mm)	Cabinet width (mm)	
	600	800
600	RAX-RK-D66-X1	RAX-RK-D86-X1
800	RAX-RK-D68-X1	RAX-RK-D88-X1
900	RAX-RK-D69-X1	RAX-RK-D89-X1
1000	RAX-RK-D61-X1	RAX-RK-D81-X1
1100	RAX-RK-D60-X1	RAX-RK-D80-X1
1200	RAX-RK-D62-X1	RAX-RK-D82-X1

RAX-RK-Dxx-X1

Castors with reinforcing fram

Castors with reinforcing frame for RMA, RZA, RTA, RYA, RDA, RDE type enclosures. Must be ordered according to the floor plan of the cabinet. **Max. recommended load capacity:**
- **900 kg** for type **RMA**, **RZA**,
- **1050 kg** for type **RTA, RYA, RDA, RDE**.

The height of the cabinet is increased by 158 mm.

Set

Castors with a brake 2x
Castors without a brake 2x
Screw M5 x 12 Thorx 16x
Screw M5 x 20 Thorx 16x
Flat washer 5,3 ..... 16x
U-profile 4x

Cabinet depth (mm)	Cabinet width (mm)	
	600	800
600	RAX-RK-T66-X1	RAX-RK-T86-X1
800	RAX-RK-T68-X1	RAX-RK-T88-X1
900	RAX-RK-T69-X1	RAX-RK-T89-X1
1000	RAX-RK-T61-X1	RAX-RK-T81-X1
1100	RAX-RK-T60-X1	RAX-RK-T80-X1
1200	RAX-RK-T62-X1	RAX-RK-T82-X1

RAX-RK-Txx-X1

Castors with reinforcing fram

Castors with reinforcing frame for RTA, RYA, RDA, RDE type enclosures. Must be ordered according to the floor plan of the cabinet.
Max. load capacity when using **RAX-RK-Txx-X1:**
- **1500 kg** including the weight of the cabinet.

The height of the cabinet is increased by 143 mm.

Set

Castors with a brake 2x
Castors without a brake 2x
Screw M5 x 12 Thorx 16x
Screw M5 x 20 Thorx 16x
Flat washer 5,3 ..... 16x
U-profile 4x

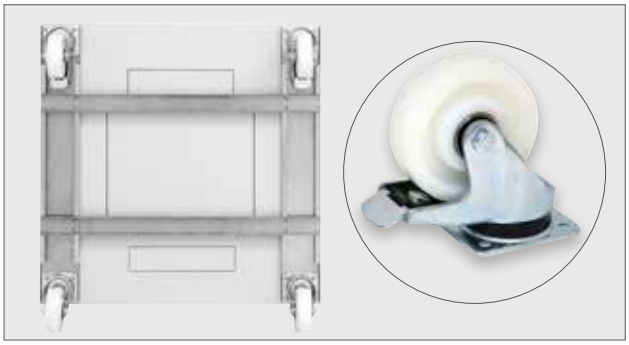

Cabinet depth (mm)	Cabinet width (mm)	
	600	800
600	RAX-RK-H66-X1	RAX-RK-H86-X1
800	RAX-RK-H68-X1	RAX-RK-H88-X1
900	RAX-RK-H69-X1	RAX-RK-H89-X1
1000	RAX-RK-H61-X1	RAX-RK-H81-X1
1100	RAX-RK-H60-X1	RAX-RK-H80-X1
1200	RAX-RK-H62-X1	RAX-RK-H82-X1

RAX-RK-Hxx-X1

Castors with reinforcing fram

Castors with reinforcing frame for RTA, RYA, RDA, RDE type enclosures. Must be ordered according to the floor plan of the cabinet.

Max. recommended load capacity:
- **1600 kg** for type **RTA, RYA,**
- **1900 kg** for type **RDA, RDE**.

The height of the cabinet is increased by 168 mm.

Set

Castors with a brake 2x
Castors without a brake 2x
Screw M5 x 12 Thorx 16x
Screw M5 x 20 Thorx 16x
Flat washer 5,3 ..... 16x
U-profile 4x

Swing frame

All 800 mm wide Triton cabinets can be equipped with a swing frame for mounting devices that require rear access. The swing frame reduces the usable height of the cabinet by 5U and can support up to 150 kg. The frame has two locks for securing it when closed. The distance of the swing frame from the cabinet doors can be smoothly adjusted. The position of the frame affects the maximum usable depth of the mounted devices. When mounted in the optimal position, it can accommodate a 19" device with a depth of up to 300 mm. The swing frame can be mounted simultaneously with 19" verticals.

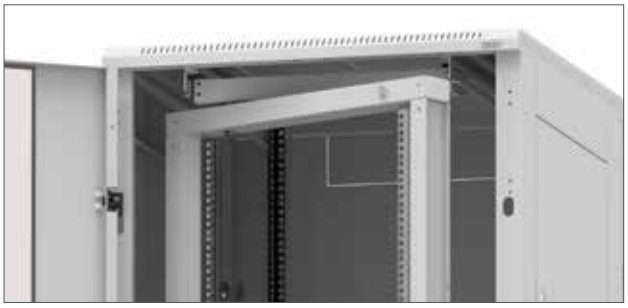

Swing frame	Cabinet height (U)	B (U) Usable frame height
RAC-VM-A17-A1	22	17
RAC-VM-A22-A1	27	22
RAC-VM-A27-A1	32	27
RAC-VM-A32-A1	37	32
RAC-VM-A37-A1	42	37
RAC-VM-A40-A1	45	40
RAC-VM-A42-A1	47	42

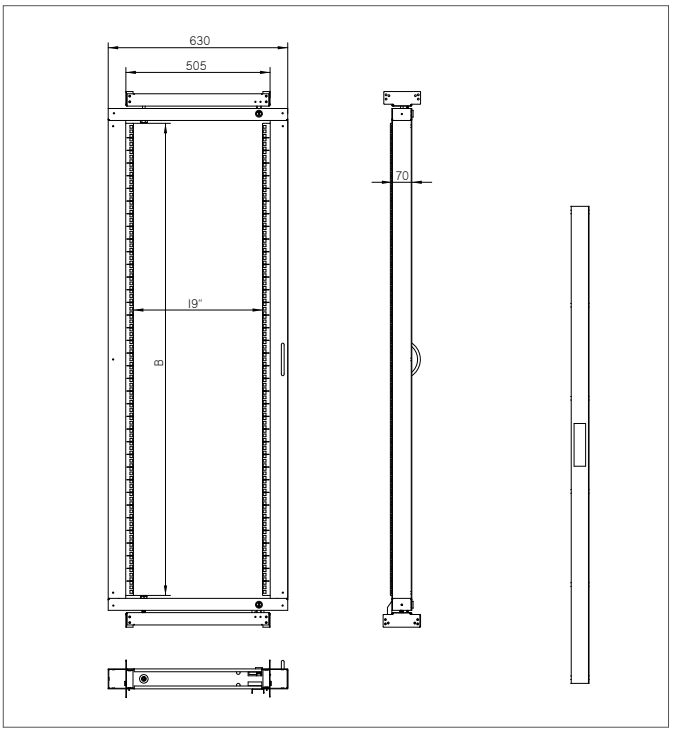

Load increase from 1200 to 1500 kg for 600/800 mm cabinet

Vertical rails strengthening member

Additional profile that increase vertical rails stability (4 pcs). It increase cabinet max. load to 1500kg.

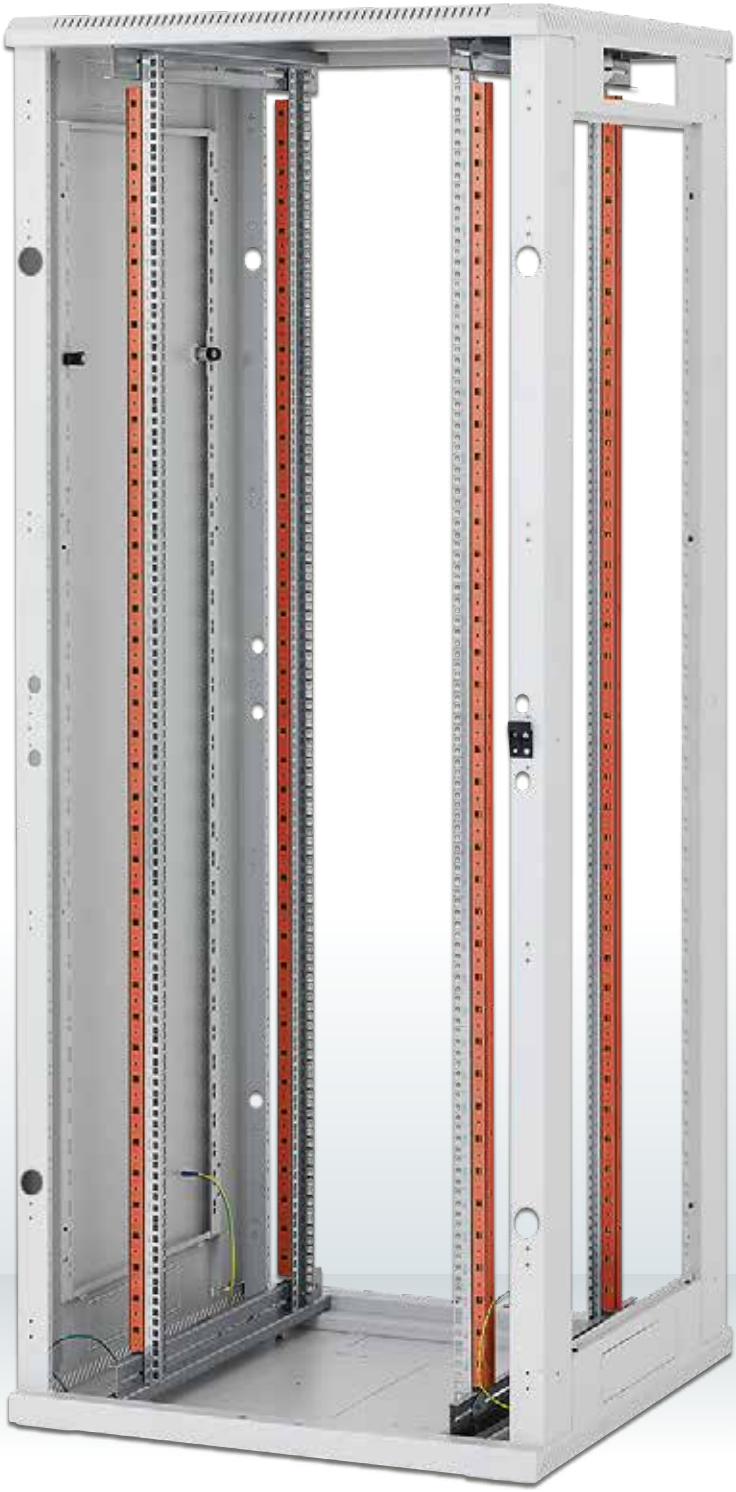

19“ rail strength member for 600 / 800 mm cabinet			
Type	**Cabinet height in units**	**Weight gross (kg)**	**Weight net (kg)**
RAX-VR-T15-X2	15	1.84	1.74
RAX-VR-T18-X2	18	2.24	2.14
RAX-VR-T22-X2	22	2.89	2.79
RAX-VR-T27-X2	27	3.64	3.54
RAX-VR-T32-X2	32	4.39	4.29
RAX-VR-T37-X2	37	5.13	5.03
RAX-VR-T42-X2	42	5.9	5.8
RAX-VR-T45-X2	45	6.34	6.24
RAX-VR-T47-X2	47	6.63	6.53

19" Cabinet in black 1200 to 1500 kg for 600/800 mm cabinet

Black with double perforated door

The same door can be installed at the front and back

Light gray with full perforated door

Can be delivered in light gray and black

RTA 800 x 800								
Type	**A**	**B**	**C**	**D**	**E**	**Weight gross (kg)**	**Weight net (kg)**	**Maximal recommended load** *(with legs or base)*
	(mm)							
RTA-42-X88-BXX-A1	1970	1868	697	800	800	93,9	86,9	1200/1500 kg with the use of reinforcing accessories RAX-VR-Txx-X2 on vertical rails
RTA-42-L88-BQX-A5-LQA	1970	1868	697	800	800	116,9	109,9	

19" Cabinet in black 1200 to 1500 kg for 600/800 mm cabinet

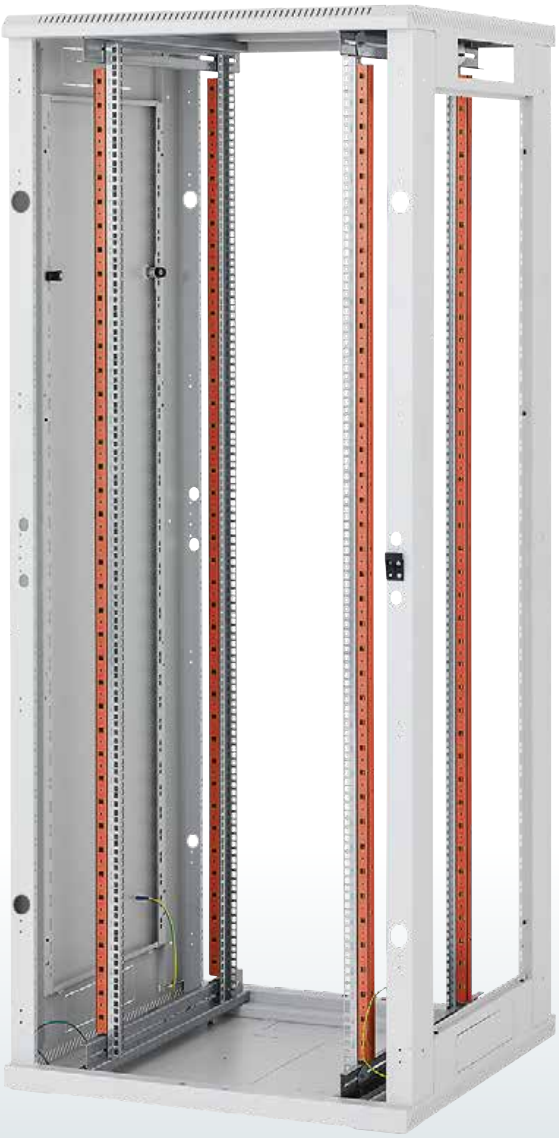

Light gray open 800x900x47U
Can be delivered in light gray and black

Light gray with full perforated door 800x900x47U
Can be delivered in light gray and black

RTA 800 x 900								
Type	**A**	**B**	**C**	**D**	**E**	**Weight gross (kg)**	**Weight net (kg)**	**Maximal recommended load** *(with legs or base)*
	(mm)							
RTA-47-A89-CXX-A1-ZZX	2194	2092	697	800	900	65,5	60,5	1200/1500 kg with the use of reinforcing accessories RAX-VR-Txx-X2 on vertical rails
RTA-47-A89-CAX-A1	2194	2092	697	800	900	132,2	124,5	

RTA 600 x 600

Type	A	B	C	D	E	Weight gross (kg)	Weight net (kg)	Maximal recommended load *(with legs or base)*
	(mm)							
RTA-15-A66-CAX-A1	770	668	497	600	600	49,5	44,0	1200/1500 kg with the use of reinforcing accessories RAX-VR-Txx-X2 on vertical rails
RTA-18-A66-CAX-A1	900	798	497	600	600	53,9	48,4	
RTA-22-A66-CAX-A1	1080	978	497	600	600	58,9	53,4	
RTA-27-A66-CAX-A1	1300	1198	497	600	600	66,1	60,5	
RTA-32-A66-CAX-A1	1525	1423	497	600	600	73,2	67,6	
RTA-37-A66-CAX-A1	1750	1648	497	600	600	80,4	74,7	
RTA-42-A66-CAX-A1	1970	1868	497	600	600	87,5	81,8	
RTA-45-A66-CAX-A1	2105	2003	497	600	600	91,9	86,1	
RTA-47-A66-CAX-A1	2194	2092	497	600	600	94,5	88,7	

RTA 600 x 800

Type	A	B	C	D	E	Weight gross (kg)	Weight net (kg)	Maximal recommended load *(with legs or base)*
	(mm)							
RTA-15-A68-CAX-A1	770	668	497	600	800	59,7	52,1	1200/1500 kg with the use of reinforcing accessories RAX-VR-Txx-X2 on vertical rails
RTA-18-A68-CAX-A1	900	798	497	600	800	64,4	56,8	
RTA-22-A68-CAX-A1	1080	978	497	600	800	70,3	62,7	
RTA-27-A68-CAX-A1	1300	1198	497	600	800	78,0	70,3	
RTA-32-A68-CAX-A1	1525	1423	497	600	800	86,0	78,3	
RTA-37-A68-CAX-A1	1750	1648	497	600	800	93,8	86,0	
RTA-42-A68-CAX-A1	1970	1868	497	600	800	101,7	93,9	
RTA-45-A68-CAX-A1	2105	2003	497	600	800	106,4	98,5	
RTA-47-A68-CAX-A1	2194	2092	497	600	800	109,3	101,5	

RTA 600 x 900

Type	A	B	C	D	E	Weight gross (kg)	Weight net (kg)	Maximal recommended load *(with legs or base)*
	(mm)							
RTA-15-A69-CAX-A1	770	668	497	600	900	65,0	57,5	1200/1500 kg with the use of reinforcing accessories RAX-VR-Txx-X2 on vertical rails
RTA-18-A69-CAX-A1	900	798	497	600	900	70,4	62,9	
RTA-22-A69-CAX-A1	1080	978	497	600	900	76,7	69,1	
RTA-27-A69-CAX-A1	1300	1198	497	600	900	85,3	77,6	
RTA-32-A69-CAX-A1	1525	1423	497	600	900	94,1	86,4	
RTA-37-A69-CAX-A1	1750	1648	497	600	900	102,8	95,0	
RTA-42-A69-CAX-A1	1970	1868	497	600	900	111,5	103,6	
RTA-45-A69-CAX-A1	2105	2003	497	600	900	116,7	108,8	
RTA-47-A69-CAX-A1	2194	2092	497	600	900	120,0	112,1	

RTA 600 x 1000

Type	A	B	C	D	E	Weight gross (kg)	Weight net (kg)	Maximal recommended load *(with legs or base)*
	(mm)							
RTA-15-A61-CAX-A1	770	668	497	600	1000	69,1	61,5	1200/1500 kg with the use of reinforcing accessories RAX-VR-Txx-X2 on vertical rails
RTA-18-A61-CAX-A1	900	798	497	600	1000	74,7	67,1	
RTA-22-A61-CAX-A1	1080	978	497	600	1000	81,2	73,6	
RTA-27-A61-CAX-A1	1300	1198	497	600	1000	90,3	82,6	
RTA-32-A61-CAX-A1	1525	1423	497	600	1000	99,4	91,7	
RTA-37-A61-CAX-A1	1750	1648	497	600	1000	108,5	100,7	
RTA-42-A61-CAX-A1	1970	1868	497	600	1000	117,6	109,7	
RTA-45-A61-CAX-A1	2105	2003	497	600	1000	122,9	115,1	
RTA-47-A61-CAX-A1	2194	2092	497	600	1000	126,4	118,5	

RTA 600 x 1100

Type	A	B	C	D	E	Weight gross (kg)	Weight net (kg)	Maximal recommended load *(with legs or base)*
	(mm)							
RTA-15-A60-CAX-A1	770	668	497	600	1100	74,5	65,9	1200/1500 kg with the use of reinforcing accessories RAX-VR-Txx-X2 on vertical rails
RTA-18-A60-CAX-A1	900	798	497	600	1100	79,9	71,4	
RTA-22-A60-CAX-A1	1080	978	497	600	1100	86,8	78,2	
RTA-27-A60-CAX-A1	1300	1198	497	600	1100	96,1	87,4	
RTA-32-A60-CAX-A1	1525	1423	497	600	1100	105,7	97,0	
RTA-37-A60-CAX-A1	1750	1648	497	600	1100	115,2	106,3	
RTA-42-A60-CAX-A1	1970	1868	497	600	1100	124,6	115,8	
RTA-45-A60-CAX-A1	2105	2003	497	600	1100	130,2	121,3	
RTA-47-A60-CAX-A1	2194	2092	497	600	1100	133,8	124,8	

RTA 600 x 1200

Type	A	B	C	D	E	Weight gross (kg)	Weight net (kg)	Maximal recommended load *(with legs or base)*
	(mm)							
RTA-15-A62-CAX-A1	770	668	497	600	1200	79,2	69,7	1200/1500 kg with the use of reinforcing accessories RAX-VR-Txx-X2 on vertical rails
RTA-18-A62-CAX-A1	900	798	497	600	1200	85,2	75,6	
RTA-22-A62-CAX-A1	1080	978	497	600	1200	92,3	82,7	
RTA-27-A62-CAX-A1	1300	1198	497	600	1200	102,0	92,3	
RTA-32-A62-CAX-A1	1525	1423	497	600	1200	112,0	102,2	
RTA-37-A62-CAX-A1	1750	1648	497	600	1200	121,8	112,0	
RTA-42-A62-CAX-A1	1970	1868	497	600	1200	131,6	121,8	
RTA-45-A62-CAX-A1	2105	2003	497	600	1200	137,4	127,5	
RTA-47-A62-CAX-A1	2194	2092	497	600	1200	141,2	131,2	

RTA 800 x 600

Type	A	B	C	D	E	Weight gross (kg)	Weight net (kg)	Maximal recommended load *(with legs or base)*
	(mm)							
RTA-15-A86-CAX-A1	770	668	697	800	600	55,7	50,1	1200/1500 kg with the use of reinforcing accessories RAX-VR-Txx-X2 on vertical rails
RTA-18-A86-CAX-A1	900	798	697	800	600	60,3	54,7	
RTA-22-A86-CAX-A1	1080	978	697	800	600	66,7	61,0	
RTA-27-A86-CAX-A1	1300	1198	697	800	600	74,6	68,7	
RTA-32-A86-CAX-A1	1525	1423	697	800	600	82,5	76,6	
RTA-37-A86-CAX-A1	1750	1648	697	800	600	93,9	87,8	
RTA-42-A86-CAX-A1	1970	1868	697	800	600	102,8	96,6	
RTA-45-A86-CAX-A1	2105	2003	697	800	600	107,3	101,1	
RTA-47-A86-CAX-A1	2194	2092	697	800	600	110,2	104,0	

RTA 800 x 800

Type	A	B	C	D	E	Weight gross (kg)	Weight net (kg)	Maximal recommended load *(with legs or base)*
	(mm)							
RTA-15-A88-CAX-A1	770	668	697	800	800	65,8	59,5	1200/1500 kg with the use of reinforcing accessories RAX-VR-Txx-X2 on vertical rails
RTA-18-A88-CAX-A1	900	798	697	800	800	70,9	64,5	
RTA-22-A88-CAX-A1	1080	978	697	800	800	79,1	72,7	
RTA-27-A88-CAX-A1	1300	1198	697	800	800	86,4	79,8	
RTA-32-A88-CAX-A1	1525	1423	697	800	800	95,1	88,5	
RTA-37-A88-CAX-A1	1750	1648	697	800	800	107,2	100,4	
RTA-42-A88-CAX-A1	1970	1868	697	800	800	116,9	109,9	
RTA-45-A88-CAX-A1	2105	2003	697	800	800	121,8	114,8	
RTA-47-A88-CAX-A1	2194	2092	697	800	800	125,1	118,1	

RTA 800 x 900

Type	A	B	C	D	E	Weight gross (kg)	Weight net (kg)	Maximal recommended load *(with legs or base)*
	(mm)							
RTA-15-A89-CAX-A1	770	668	697	800	900	70,5	63,5	1200/1500 kg with the use of reinforcing accessories RAX-VR-Txx-X2 on vertical rails
RTA-18-A89-CAX-A1	900	798	697	800	900	75,8	68,8	
RTA-22-A89-CAX-A1	1080	978	697	800	900	83,0	76,0	
RTA-27-A89-CAX-A1	1300	1198	697	800	900	92,0	84,8	
RTA-32-A89-CAX-A1	1525	1423	697	800	900	101,1	93,8	
RTA-37-A89-CAX-A1	1750	1648	697	800	900	113,6	106,1	
RTA-42-A89-CAX-A1	1970	1868	697	800	900	123,6	116,0	
RTA-45-A89-CAX-A1	2105	2003	697	800	900	128,7	121,1	
RTA-47-A89-CAX-A1	2194	2092	697	800	900	132,2	124,5	

RTA 800 x 1000

Type	A	B	C	D	E	Weight gross (kg)	Weight net (kg)	Maximal recommended load *(with legs or base)*
	(mm)							
RTA-15-A81-CAX-A1	770	668	697	800	1000	75,2	68,0	1200/1500 kg with the use of reinforcing accessories RAX-VR-Txx-X2 on vertical rails
RTA-18-A81-CAX-A1	900	798	697	800	1000	88,2	80,9	
RTA-22-A81-CAX-A1	1080	978	697	800	1000	97,5	90,1	
RTA-27-A81-CAX-A1	1300	1198	697	800	1000	107,0	99,5	
RTA-32-A81-CAX-A1	1525	1423	697	800	1000	119,8	112,2	
RTA-37-A81-CAX-A1	1750	1648	697	800	1000	130,2	122,4	
RTA-42-A81-CAX-A1	1970	1868	697	800	1000	135,6	127,8	
RTA-45-A81-CAX-A1	2105	2003	697	800	1000	139,2	131,4	
RTA-47-A81-CAX-A1	2194	2092	697	800	1000	126,0	120,0	

RTA 800 x 1100

Type	A	B	C	D	E	Weight gross (kg)	Weight net (kg)	Maximal recommended load *(with legs or base)*
	(mm)							
RTA-15-A80-CAX-A1	770	668	697	800	1100	79,7	72,8	1200/1500 kg with the use of reinforcing accessories RAX-VR-Txx-X2 on vertical rails
RTA-18-A80-CAX-A1	900	798	697	800	1100	85,1	78,1	
RTA-22-A80-CAX-A1	1080	978	697	800	1100	92,9	85,9	
RTA-27-A80-CAX-A1	1300	1198	697	800	1100	102,6	95,5	
RTA-32-A80-CAX-A1	1525	1423	697	800	1100	112,4	105,2	
RTA-37-A80-CAX-A1	1750	1648	697	800	1100	125,6	118,3	
RTA-42-A80-CAX-A1	1970	1868	697	800	1100	136,4	128,9	
RTA-45-A80-CAX-A1	2105	2003	697	800	1100	142,0	134,4	
RTA-47-A80-CAX-A1	2194	2092	697	800	1100	145,7	138,1	

RTA 800 x 1200

Type	A	B	C	D	E	Weight gross (kg)	Weight net (kg)	Maximal recommended load *(with legs or base)*
	(mm)							
RTA-15-A82-CAX-A1	770	668	697	800	1200	83,9	76,9	1200/1500 kg with the use of reinforcing accessories RAX-VR-Txx-X2 on vertical rails
RTA-18-A82-CAX-A1	900	798	697	800	1200	89,8	82,8	
RTA-22-A82-CAX-A1	1080	978	697	800	1200	98,0	90,9	
RTA-27-A82-CAX-A1	1300	1198	697	800	1200	108,0	100,8	
RTA-32-A82-CAX-A1	1525	1423	697	800	1200	118,2	110,9	
RTA-37-A82-CAX-A1	1750	1648	697	800	1200	129,9	122,4	
RTA-42-A82-CAX-A1	1970	1868	697	800	1200	142,9	135,3	
RTA-45-A82-CAX-A1	2105	2003	697	800	1200	148,7	141,1	
RTA-47-A82-CAX-A1	2194	2092	697	800	1200	152,6	145,0	

RTA 800 x 1100

Type	A	B	C	D	E	Weight gross (kg)	Weight net (kg)	Maximal recom-mended load (kg)
	(mm)							
RTA-15-A80-CAX-A1	770	668	687	800	1100	79,7	72,8	1200 1500*
RTA-18-A80-CAX-A1	900	798	687	800	1100	85,1	78,1	
RTA-22-A80-CAX-A1	1080	978	687	800	1100	92,9	85,9	
RTA-27-A80-CAX-A1	1300	1198	687	800	1100	102,6	95,5	
RTA-32-A80-CAX-A1	1525	1423	687	800	1100	112,4	105,2	
RTA-37-A80-CAX-A1	1750	1648	687	800	1100	125,6	118,3	
RTA-42-A80-CAX-A1	1970	1868	687	800	1100	136,4	128,9	
RTA-45-A80-CAX-A1	2105	2003	687	800	1100	142,0	134,4	
RTA-47-A80-CAX-A1	2194	2092	687	800	1100	145,7	138,1	

RTA 800 x 1200

Type	A	B	C	D	E	Weight gross (kg)	Weight net (kg)	Maximal recom-mended load (kg)
	(mm)							
RTA-15-A82-CAX-A1	770	668	687	800	1200	83,9	76,9	1200 1500*
RTA-18-A82-CAX-A1	900	798	687	800	1200	89,8	82,8	
RTA-22-A82-CAX-A1	1080	978	687	800	1200	98,0	90,9	
RTA-27-A82-CAX-A1	1300	1198	687	800	1200	108,0	100,8	
RTA-32-A82-CAX-A1	1525	1423	687	800	1200	118,2	110,9	
RTA-37-A82-CAX-A1	1750	1648	687	800	1200	129,9	122,4	
RTA-42-A82-CAX-A1	1970	1868	687	800	1200	142,9	135,3	
RTA-45-A82-CAX-A1	2105	2003	687	800	1200	148,7	141,1	
RTA-47-A82-CAX-A1	2194	2092	687	800	1200	152,6	145,0	

* With using of strengthening members of vertical rails.

RTA 66*

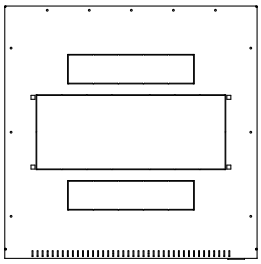

RTA 68**

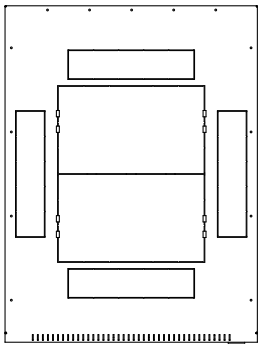

RTA 69, 61, 60, 62**

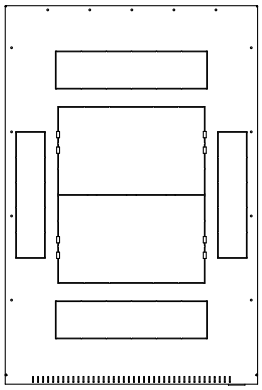

Recommended fan units

* RAC-CH-X24(25,26)-X1

** RAC-CH-X03(04,05)-X3

RTA 86*

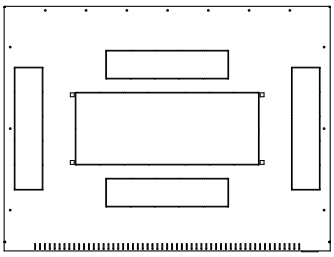

RTA 88, 89, 81 ,80 ,82**

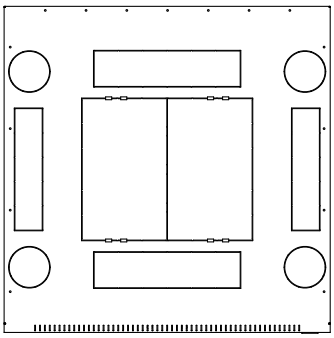

Variant A1

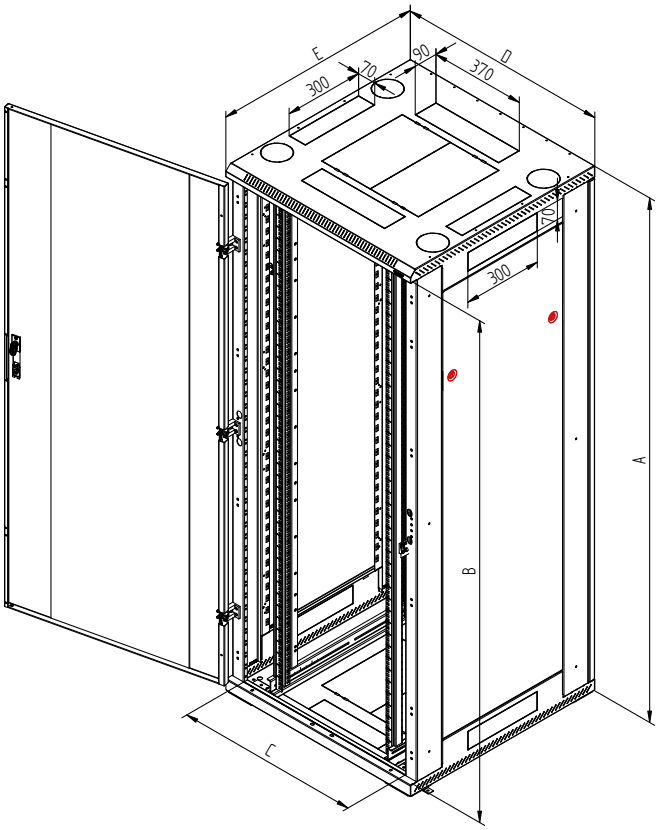

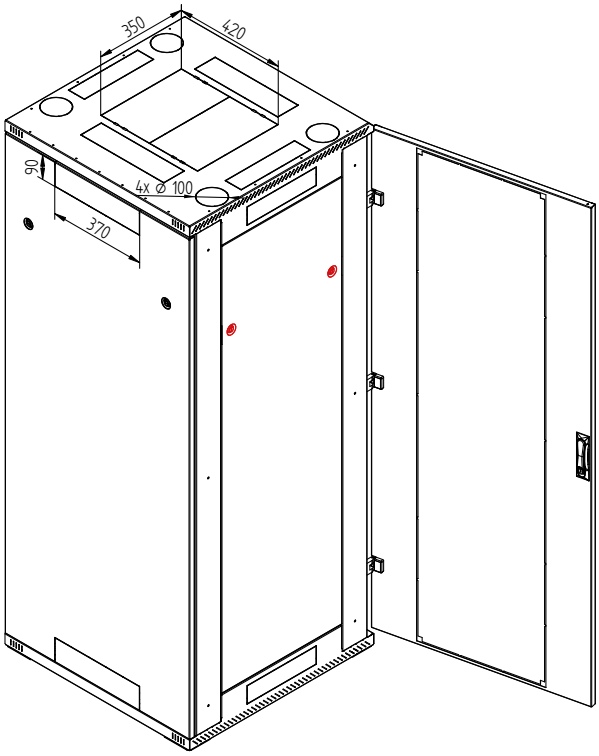

Variant A5

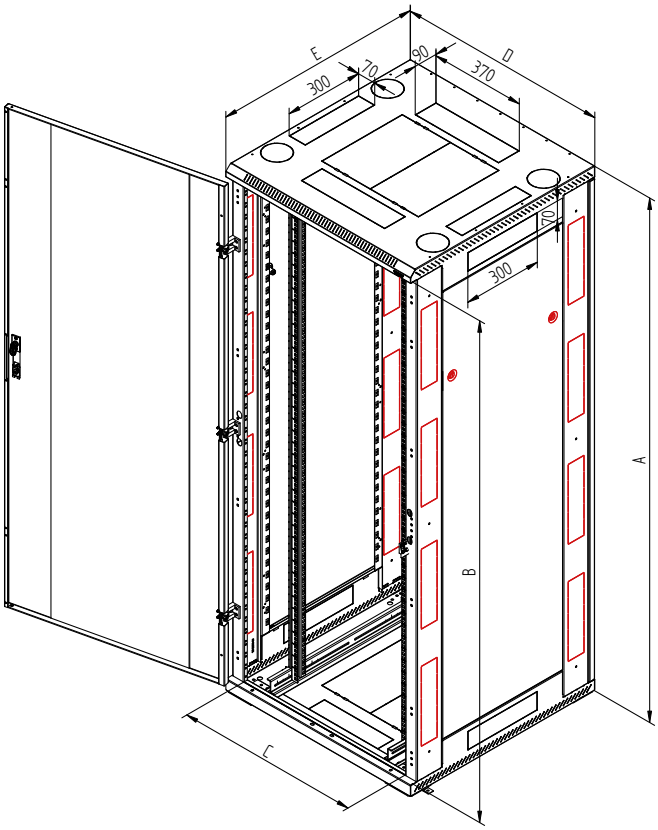

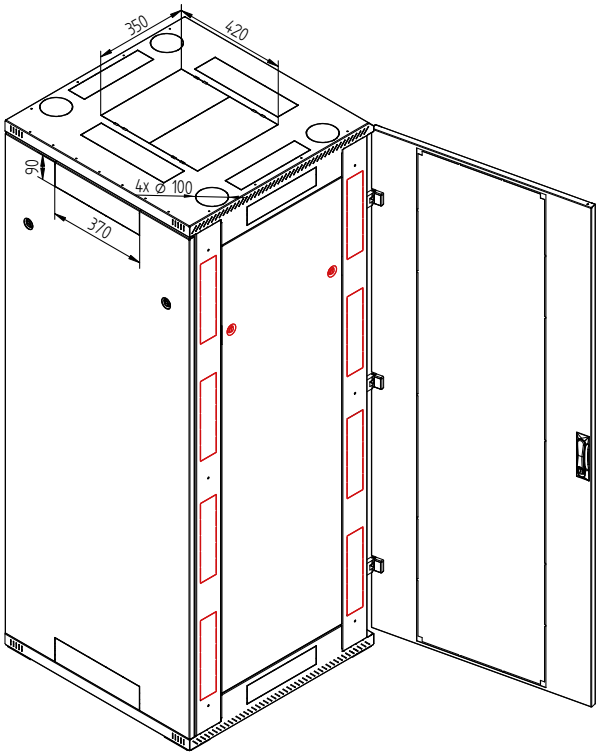

Variant A3 for data centers

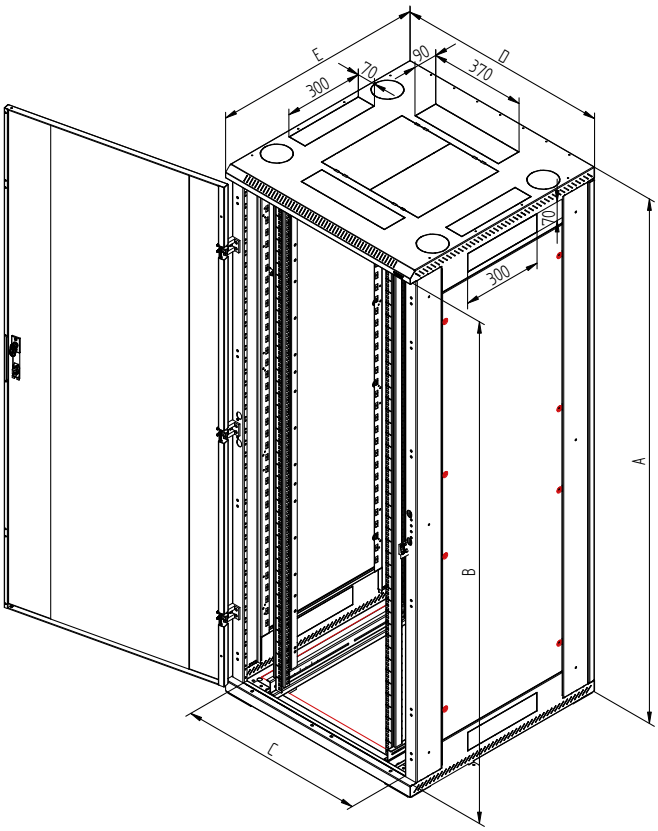

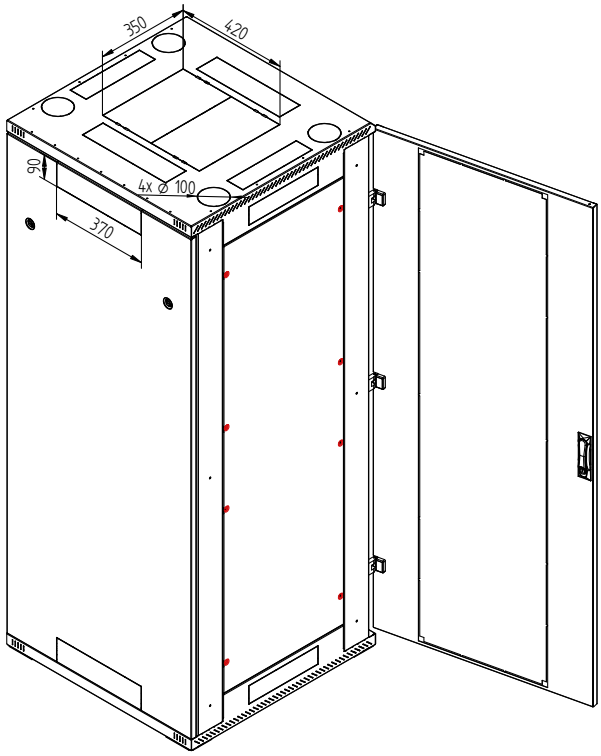

Variant A7 for data centers

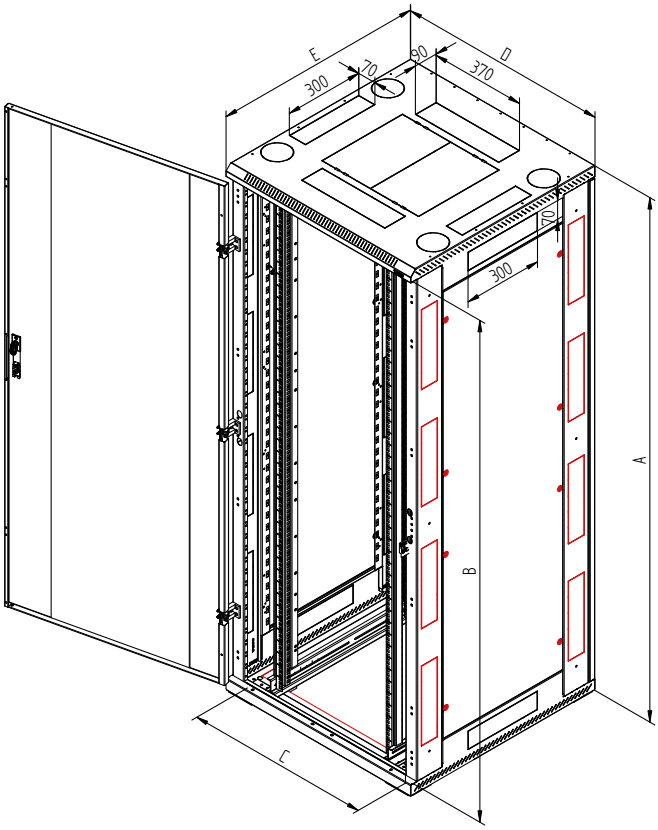

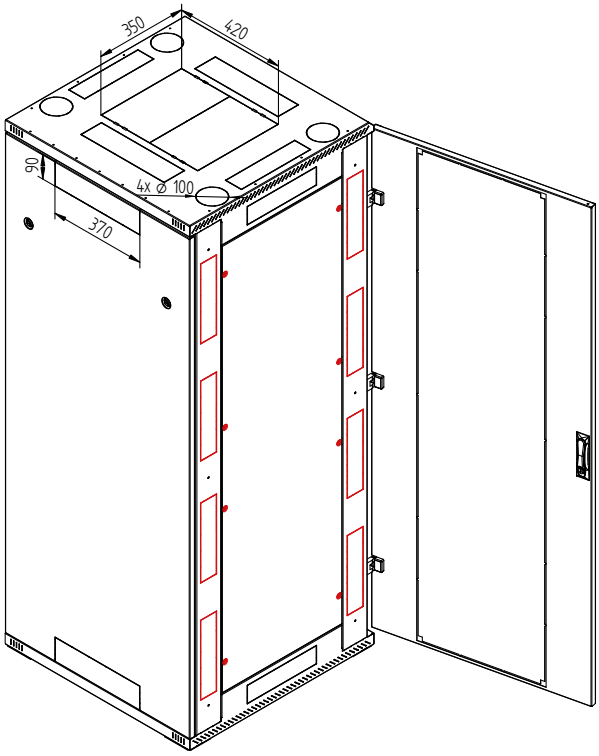

RTA free-standing cabinet

Universal cabinet for data and telecommunication purposes. High load capacity for demanding applications, large selection of dimensions and variants together with wide range of accessories and perfect workmanship of all details make it the top cabinet in our offer.

PRODUCT DETAILS

Rigid construction
The RTA has a robust welded construction, which is made completely of 1.3 mm thick material. High quality workmanship and the latest technology ensure excellent design of the cabinet.

Flexible door opening
The hinge system allows the door to open almost 180°. The door can be easily removed and re-mounted to change the direction of opening. The double wing doors are equipped with hook-on hinges.

Tritón handles
We manufacture our own handles for the free-standing cabinets. By replacing the plastic module (not included), a half-cylindrical lock insert can be fitted. Patent: PUV 2013-27443

Adjustable vertical rails
Vertical 19" rails can be adjusted freely in any depth of the cabinet. This simplifies mounting of the device and configuration of cables.

Removable side panels and rear cover
RTA is a cabinet with welded skeleton, removable side panels and rear cover. The covers are attached to the skeleton by locks, as a standard with uniform key (variants A1 and A5). Variants A3 and A7 have panels secured with safety countersunk screws.

Door for fan units
With this cabinet type, it is possible to order a special metal door ready for mounting RAx-CH-X0x-X3 fan units. Further information is available in the section Active cooling.

Break-out blanking panels
Entry openings for cables are covered with breakout-type blanking panels. To prevent dust penetration, cables can be sealed in the opening with a brush strip, or simply secure by a protective fringe edge (both supplied with the cabinet).

Opening for a fan unit
A large opening covered with a breakout-type blanking panel enables mounting and removal of the Triton fan unit from the outside of the cabinet without the need of using screws.

Castors, levelling feet, base
The cabinet can be placed on levelling feet (included) or, with optional equipment, on a base, castors or heavy-duty castors with reinforcing frame.

Rear side of the cabinet
There are two cable entries on the rear wall of the cabinet covered with breakout panels. One is at the top and the other at the bottom edge of the cover. The other cable entries are on the ceiling and in the base of the cabinet.

Perforation of the skeleton
The RTA cabinets have a perforated skeleton to provide cooling air access to the installed technology. Cooling can be supported by the installation of fan units.

Bonding
All detachable parts are bonded together according to the requirements of the relevant standard.

Flex frame
(valid for 800mm wide cabinets) The system allows the installation of sliding rails in 19", 21" and 23" spans. Another option is to shift the 19" vertical rail spacing to one side to provide more space on the other side.

Middle pair of vertical rails
For enclosures deeper than 800 mm, a third pair of vertical rails for mounting the technology is supplied as standard. Thanks to their open profile, they do not restrict the installation of deeper equipment. Shorter devices can be mounted on the central vertical rail using different types of brackets (optional accessories).

Wide skeleton rails
The wide skeleton rails are designed for the additional installation of accessories, such as power distribution units or vertical cable management panels that do not occupy the 19" units inside cabinet. Thanks to the design, the power distribution panels do not limit the use of slide-out servers even in 600 mm wide cabinets.

Accessories in skeleton rails
The skeleton rails have mounting holes on the inner edges throughout their entire height. The holes are at the unit spacing of the vertical rails and can be can be used for mounting certain types of accessories.

Skeleton rails on -A5 and -A7 versions
The "A5" and "A7" versions (at the end of the cabinet code) have in skeleton rails the cable entries with break-out covers to allow patch cords to be routed between the adjacent cabinets.

OPTIONAL ACCESSORIES

RAC-VP-D5x-X1
Horizontal cable management panel. Installation in the skeleton (rail) of the cabinet.

RAX-VP-Vxx-X2
Vertical cable management panel. Installation in the cabinet skeleton rail.

Power distribution units
Possibility of installing the PDU in the skeleton rails of the cabinet using a bracket (optional accessory).

Swing frame
All 800mm wide RTA cabinets can be equipped with a swing frame with a load capacity of 150kg. Maximum available depth of the 19" equipment is 330 mm.

Increase in load capacity from 1200 kg to 1500 kg
Reinforcing element of the vertical rails RAX-VR-Txx-X2. Closed profile made of 1 mm thick material (4 pieces). It increases the load capacity of the cabinet up to 1500 kg.

DESCRIPTION, USAGE

- 19" free-standing cabinet with IP20 protection.
- Cabinet includes 4 adjustable vertical rails for device mounting (6 rails for cabinets deeper than 800 mm).
- **Cabinet construction:**
  – welded steel frame with removable side panels,
  – single or double doors in versions of solid metal, perforated (80 % and 86 % air permeability) or glazed with safety tempered glass 4 mm, (they can be on the front or back of the cabinet),
  – ready for installation of vertical cable management panels and power distribution units including mounting brackets into the skeleton of the cabinet,
  – preparation for easy joining of cabinets into larger assemblies,
  – 800 mm wide cabinets have round cable entries with break-out covers in the corners of the ceiling.
- Max. permissible load of the door is 20 kg.
- Min. thickness of the surface finish is 65 µm.
- These cabinets are intended for installation data and telecommunication devices and their distribution systems.
- The frame of the cabinet and all the removable parts (side and rear covers, doors…) are bonded with flexible cables that have to be properly fixed and inserted into connectors throughout the period of use of the cabinet.
- There is one M8 screw placed on the bottom part of the cabinet as a central earthing point..
- Cable openings covered with breakout-type blanking panels are placed in the top and the bottom part of the cabinet.
- The "A5" and "A7" versions have in skeleton rails the cable entries with break-out covers to allow patch cords to be routed between the adjacent cabinets.
- The maximum recommended static load of the cabinet is 1200 kg using levelling feet or a base, or 1500 kg with the RAX-VR-Txx-X2 reinforcement kit.

ADDITIONAL INFORMATION

Operating conditions

- **Operating environment:**
  – the indoor environment,
  – the cabinet is not intended for outdoor installations and for installations in environment that can negatively influence the functionality of the cabinet and the mounted devices (e.g. environment with danger of explosion or humid and wet surroundings).
- **Must be protected against:**
  – mechanical damage,
  – improper handling,
  – a different usage than the cabinet is intended for.

- **Improper handling is especially:**
  – overloading (exceeding the maximum recommended load capacity),
  – installation of equipment that adversely affects the operation and function of the cabinet or installed equipment,
  – change of the construction or design of the cabinet.
- When using the RAX-MS-X47-X1 castor set for direct mounting on the cabinet (the height of the cabinet is increased by 155 mm), the maximum total load capacity must be observed including the weight of the cabinet:
  – 500 kg for type RTA, RYA, RDA, RDE 600 mm wide,
  – 600 kg for type RTA, RYA, RDA, RDE 800 mm wide.
- When using the RAX-RK-Dxx-X1 castor set with reinforcing frame (RAX-MS-X47-X1 castors included), the maximum total load capacity is 1050 kg including the weight of the cabinet**. The height of the cabinet is increased by 158 mm. The specified load capacity is valid for both 600 and 800mm cabinet widths.
- When using the RAX-RK-Txx-X1 castor set with reinforcing frame, the maximum total load capacity is 1500 kg including the weight of the cabinet**. The height of the cabinet is increased by 143 mm. The specified load capacity is valid for both 600 and 800mm cabinet widths.
- When using the RAX-RK-Hxx-X1 castor set with reinforcing frame, the maximum total load capacity is 1600 kg including the weight of the cabinet**. The height of the cabinet is increased by 168 mm. The specified load capacity is valid for both 600 and 800mm cabinet widths.
- To guarantee stability, at least 65% of the load must be installed in the lower half of the cabinet height.
- The relevant standards* must be observed when taxiing with a loaded cabinet..

Installation of the cabinet

- To ensure the maximum recommended load capacity and stability, it is essential that the load is evenly distributed between the front and rear vertical rails.
- The cabinet must be placed on a level floor and and adjust any differences using the levelling feet.
- To avoid dust penetration in the case where cables lead through some of the cable openings, it may be sealed with a brush and secured by the fringe edge (both are included in the delivery).

Environmental protection

- All parts are made of recyclable materials and after decommissioning the cabinet, it must be disposed of according to relevant regulations.

Certificate and conformity

- This product is certified with TÜV SÜD Czech and fully in accordance with ČSN EN 62208 ed.2:2012(EN 62208:2011). Latest certificate is available at www.triton-racks.com/certificates.

** The load capacities of the castors are applicable for travel speed up to 4 km/h on level ground and smooth surface at ambient temperature in the range of 10-30 °C. All dimensions, load capacities and tolerances correspond to following standards: EN 12527-12533, DIN 7845.*

*** Total weight of the cabinet = weight of the cabinet itself + installed accessories + installed equipment.*
Load capacity per wheel = Total weight of the enclosure / 3.

Configurator

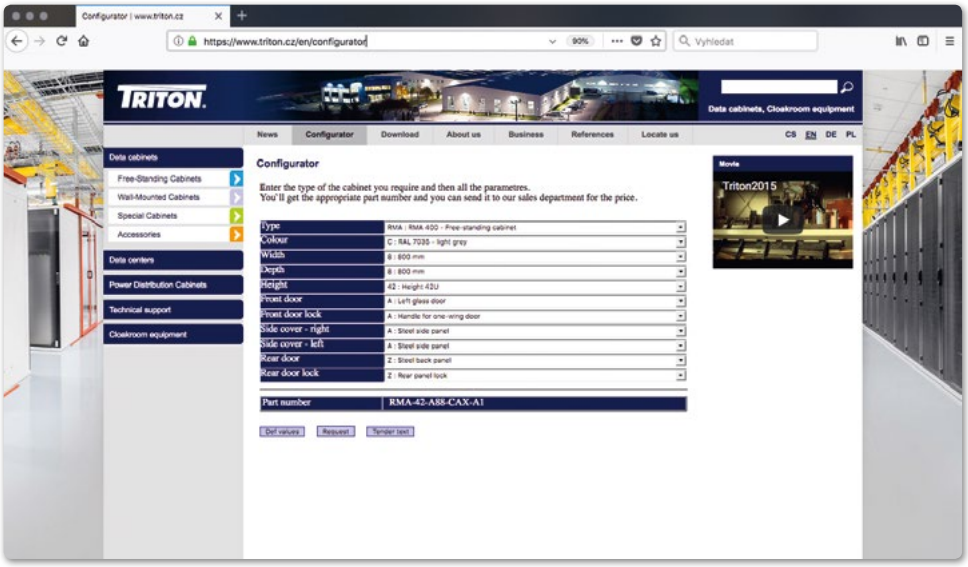

To help you with selecting the right type of product for your needs we have prepared a configurator of Triton products. **Create a product code** of cabinet as per your needs.

Exact specification of free-standing cabinets can be found in our configurator on web page **http://www.triton.cz/en/configurator**

Part numbering of free-standing cabinets

Type

D – maximum load 1800 kg
I – RIE
J – RJA
M – RMA
O – ROA
P – RPA, RPE
S – 19" open frame
T – RTA
Y – RYA
Z – RZA – ready to assemble

Front door

A – left glass
B – right glass
C – steel left
D – steel right
E – double door – glass
F – double door – steel
G – double door, perforated with 80 % permeability
L – left perforatd with 80 % permeability
M – right perforated with 80 % permeability
O – rear perforated panel with 80% permeability
Q – double door, perforated with 86% permeability
R – left perforated with 86% permeability
S – right perforated with 86% permeability
T – back cover with 86 % permeability
X – without door
Z – steel rear panel

Front door lock

A – Triton plastic handle
B – one-point code locking system
C – three-point lock
E – three-point lock on Triton handle with cylindrical insert
F – Triton handle with cylindrical insert
H – three-point code locking system
J – 3-point locking system with cylinder Triton for one-wing door (pair)
M – three-point lock for cylinder
O – Handle with cylinder lock Triton for one-wing door (pair)
P – Triton handle with no cylindrical insert - uniform key
Q – three-point lock with Triton handle with no cylindrical insert
U – lock for one-wing door - cylinder Triton - uniform key
X – without lock

Rear door

the same part numbering as front door

Side cover

See configurator on www.triton.cz

R X X - X X - X X X - X X X - X 1 - X X X

Protection

A – IP20
B – IP40
E – IP54
X – no IP

Height

height of cabinet or frame in units

Width

6 – 600 mm
8 – 800 mm

Depth

6 – 600 mm
8 – 800 mm
9 – 900 mm
1 – 1000 mm
0 – 1100 mm
2 – 1200 mm

Colour

B – black RAL 9005
C – grey RAL 7035

Enclosure

A – 19"
B – 21"
C – 10"
X – without inch spacing

Rear door lock

the same part numbering as front door lock